LET	ALTERATION	DATE	BY	LET	ALTERATION	DATE	BY
				B.	CHANGED SHOULDER ON BRACKET TO SUPPORT NO WT CHG.	5-15-62	[illegible]
				B.	REMOVED REFERENCE FROM [illegible] REMOVED REFERENCE [illegible]		
					CHG. PRESTION OF DAMPER TO PROPER NO WT CHG.	7-26-62	[illegible]
				B	ON PACK INK AND REMOVED ANA 615 DS REPLACED WITH AN 492-33(1) AN 380-2-2(1) QT102-AL4(2) NO WT CHG.		
				E	ON FACE OF DWG CHANGED LOC. OF HOLE THRU 28F6884 ON FACE OF DWG 1 IN. D/T QT102-AL4 WAS QT102-AL4 NO WT CHG.	6-19-62	[illegible]

E.O. 2 3386 MCR 23-6, 118-12

E.O. A3484AA MCR 23-6, 118-12

MCR 23-6, 118-12 and E.O. 23386 MCR 23-6

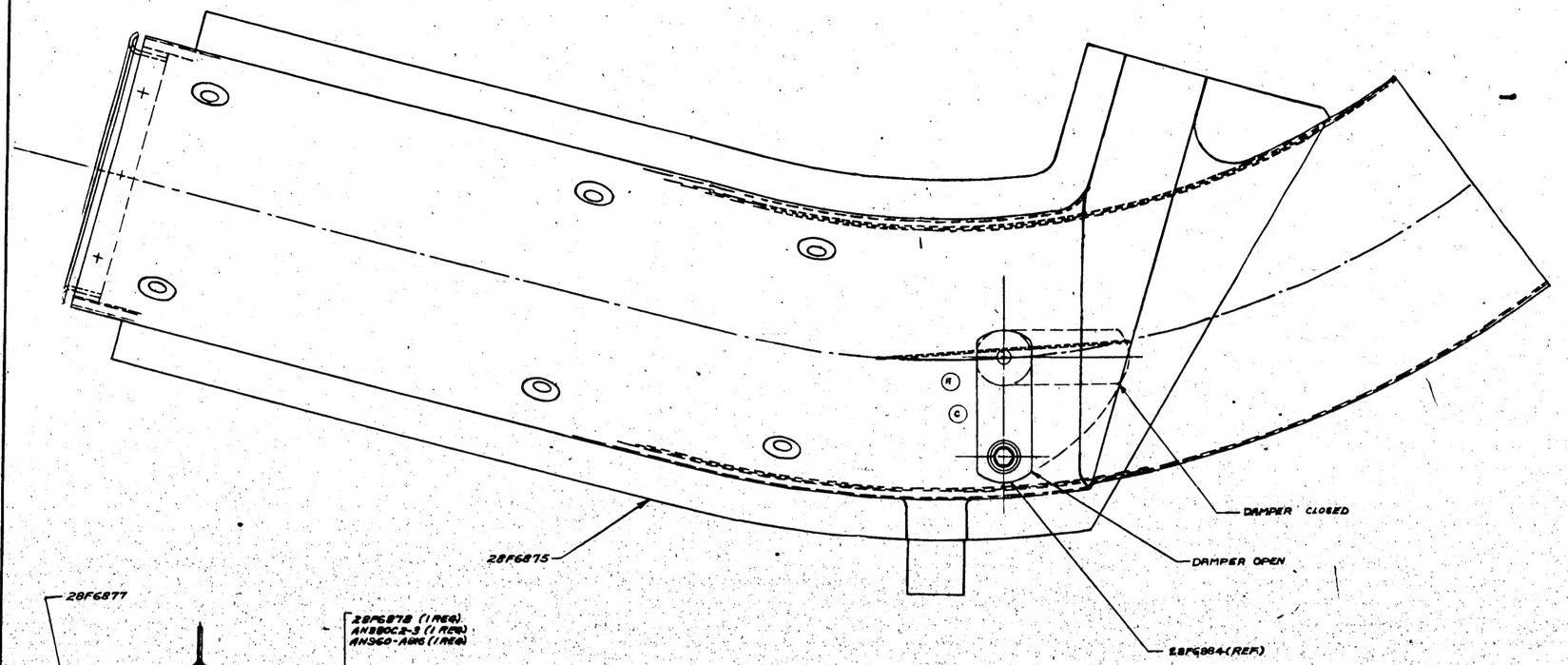

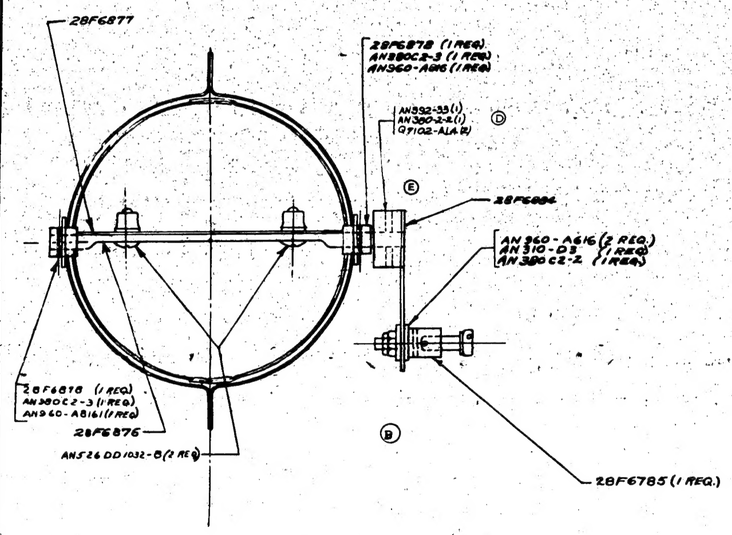

QT102-AL4												2	
AN380-2-2												1	
AN392-33												1	
AN380-C2-2													
AN960-A616												2	
AN960-A616												2	
AN526DD1032-8												2	
AN380C2-3												1	
AN310-D3												1	